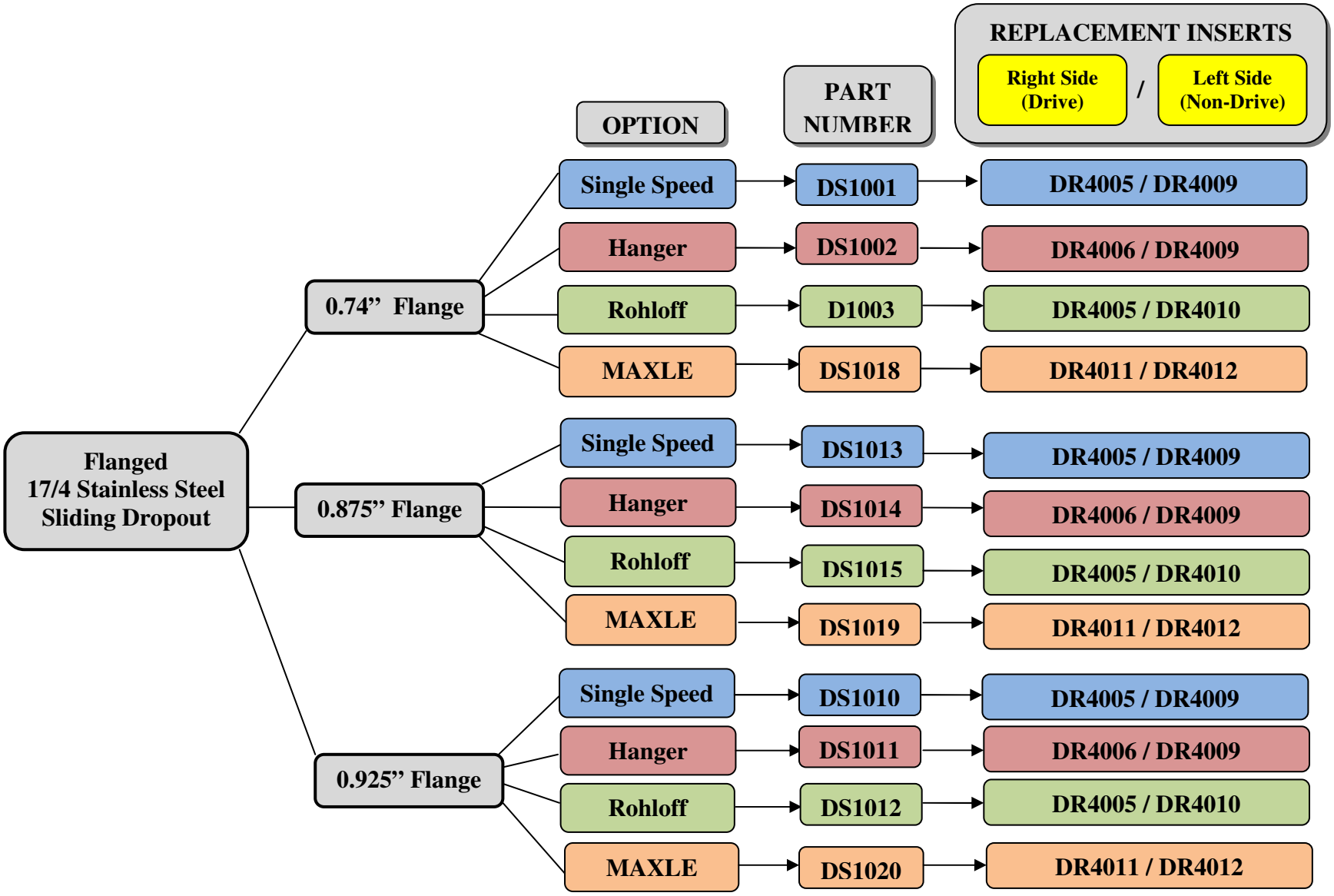
Flanged
17/4 Stainless Steel
Sliding Dropout
OPTION
PART NUMBER
REPLACEMENT INSERTS
Right Side (Drive)
/
Left Side (Non-Drive)
0.74" Flange
Single Speed
DS1001
DR4005 / DR4009
Hanger
DS1002
DR4006 / DR4009
Rohloff
D1003
DR4005 / DR4010
MAXLE
DS1018
DR4011 / DR4012
0.875" Flange
Single Speed
DS1013
DR4005 / DR4009
Hanger
DS1014
DR4006 / DR4009
Rohloff
DS1015
DR4005 / DR4010
MAXLE
DS1019
DR4011 / DR4012
0.925" Flange
Single Speed
DS1010
DR4005 / DR4009
Hanger
DS1011
DR4006 / DR4009
Rohloff
DS1012
DR4005 / DR4010
MAXLE
DS1020
DR4011 / DR4012